MD 63 2a

1-Phase 230 V 50 Hz

Duty Type	: S1
Degree of protection	: IP 55 (TEFC)
Insulation class	: F (155 °C)
Temp rise	: Class B (80K)
Mounting Design	: B3

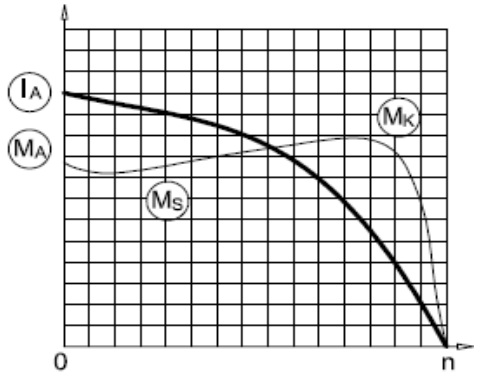

ELECTRICAL DESIGN

Rated output (kW)	: 0.18
Speed (rpm)	: 2860
Rated current (A)	: 1.3
Torque – Mn (Nm)	: 0.6
Permanent Capacitor 400V (μF)	: 8
Cos φ	: 0.94
Efficiency %	: 64.0
Moment of inertia J $(kgm)^2$	: 0.00012

Locked rotor Current – Ia (A)	: 5.46
Ia / In	: 4.2
Locked rotor Torque – Ma (Nm)	: 0.5
Ma / Mn	: 0.85
Breakdown Torque – Mk (Nm)	: 1.4
Mk / Mn	: 2.4

MECHANICAL DESIGN

Frame	: Aluminium
End shields	: Aluminium
Cooling fan	: Plastic
Terminal box	: Plastic
Cable gland	: Pg 11
No of cable glands	: 1

Bearing Arrangement

	Drive End	Non Drive End
Standard design	6201 ZZ	6201 ZZ

Paint : RAL 7031- Grey

Approximate weight (kg) : 4.2

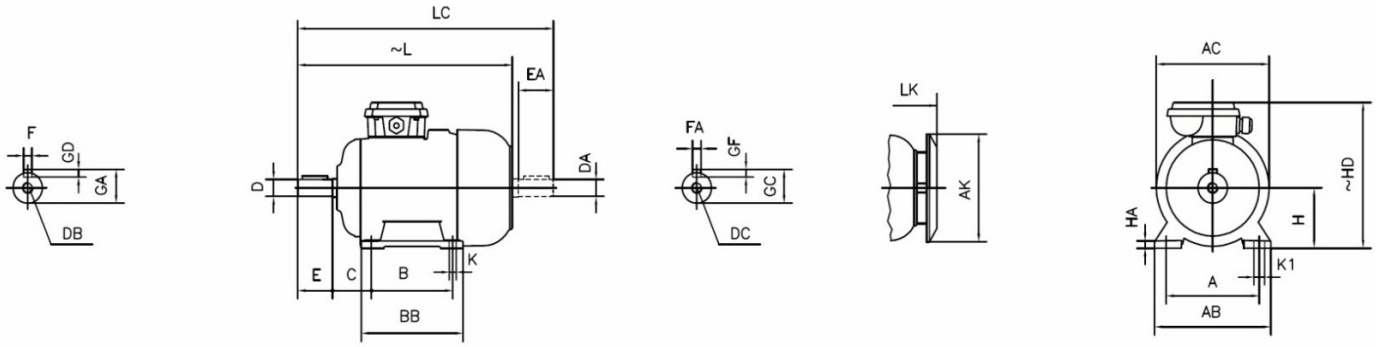

DIMENSIONS

FOOT MOUNTED MOTORS - B3, B6, B7, B8 B15, V5, V6																			
H	HD ~	HA	A	AB	AC Ø	AK Ø	K	K1	B	BB	L ~	LC	LK ~	C	E EA	DB DC	DØ DAØ	GA GC	FXGD FAXGF
63	189	10	100	125	121	116	7	11	80	103	215	242	245	40	23	M4	11	12.5	4X4